3P Filter Collector

Art.-Nr. 2000810 brown
Art.-Nr. 2000820 grey

3P Technik

Description:

The 3P Filter Collector filters and collects rainwater for water butts and rain tanks.
It is made of high quality durable plastic.

The Filter Collector leads clean water to the storage tank with high efficiency under normal rainfall (85 to 95%). The filter can act as the overflow outlet for the tank once filled.

With 2 positions open or closed.

Integrated filter sieve. The mesh is made of stainless steel (mesh size 0,7 x 1,7 mm).

For roof areas up to 70 m².

For installation in downpipes at 68 mm and 110 mm, adapters included.

Easy installation and maintenance.

Complete with adapter and reduction sets.

Technical Description:

1. Reduction at Ø 68 - 100 mm.
2. Connector for downpipes Ø 110 mm.
3. Outlet connection at Ø 75 mm.
4. Adapter for connection Ø 50 mm/32 mm.
5. Guiding plates.
6. Stainless Steel filter mesh.
7. Settings for open/closed conditions.

How it works:

1. Rainwater is channelled from the filter entrance to the sieve cartridge.
2. Dirt is rinsed to the sides, and to waste.
3. Cleaned water is led through the cartridge outlet channel to storage.
4. Settings for winter and summer conditions. Twist 180° to remove cartridge filter, no need to demount filter body.
   The filter cartridge can be cleaned easily with detergent and a brush.

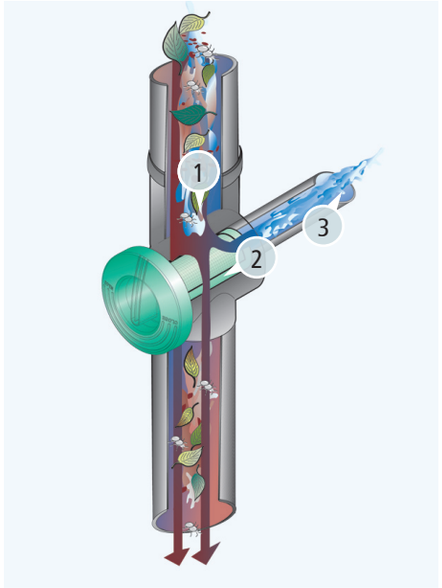

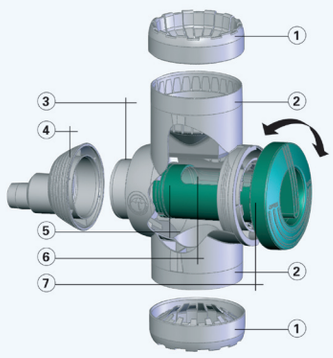

Technical Data:

Assembly in standpipes or downpipes at Ø68 - 110 mm.

Housing material: Polyethylen
Material filter sieve: stainless steel 1.403

Mesh size 0,7 x 1,7 mm

Weight: 0,86 kg

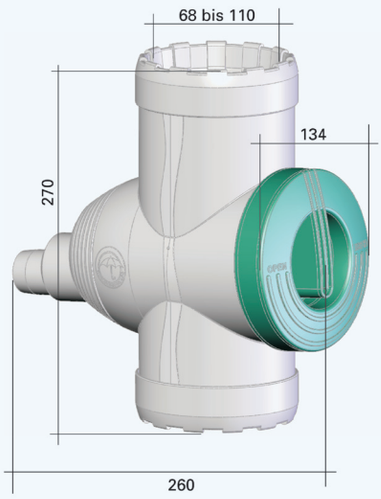

Example 1:

3P Filter Collector brown with adapter, here connected directly with the 3P Rainwater Tank with a capacity of 300 l.

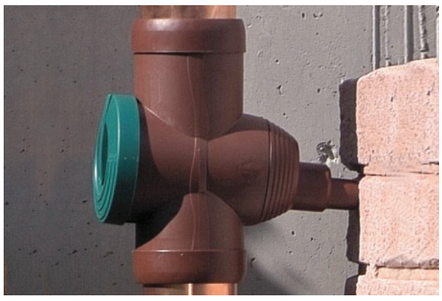

Example 2:

3P Filter Collector grey without adapter, here connected directly with the 3P Rainwater Tank with a capacity of 500 l.

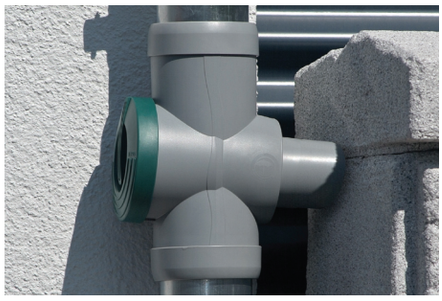

Example 3:

3P Filter Collector grey connected with a Feature Water Tank.

Ausschreibungstext:

Pos.	Quantity	Article	Price in €
1.1	_____	3P Filter Collector Rainwater Filter for installation in downpipes at Ø 68 - 110 mm . Outlet DN 70 or with adapter DN 50 and Ø 32 mm. Filter sieve made of stainless steel, mesh size 0,7 x 1,7 mm. For filling water butts and smaller rain tanks. Dirt is led to the sewer, cleaned water is led through the cartridge´s outlet channel to storage.	_____

Accessories 1:

3P Connection Set Art.-Nr. 9000123
Hose Ø 32 mm with tank wall seal connector and hand drill.
Length of hose: 250 mm.

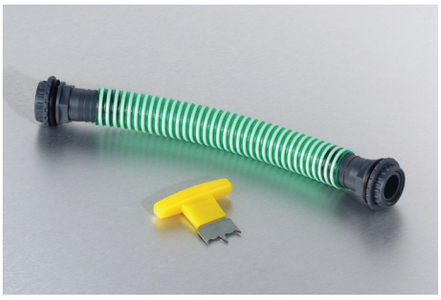

Accessories 2:

3P Circular Saw DN 50 Art.-Nr. 9000276
For connection of the 3P Filter Collector with outlet DN 50 to the butt. Connection has to be made over HT-pipe DN 50, seal DN 50 is included.

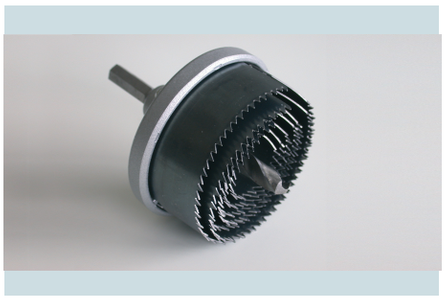

Observations:

Packing:
in 8 languages and 4 colors

Packing unit:

Covering box: 790x575x700mm: 29 pieces
Pallet: 174 pieces

EAN:

4018712000627 grey 2000820
4018712000610 brown 2000810